PROTHERM ELECTRIC INFRARED

TRIMAC INDUSTRIAL SYSTEMS

MINI-MOBILE™ Powder Coat & Cure: Standard

OPERATING PARAMETERS	
PRODUCT:	VARIOUS
MAX HEIGHT:	<20"
MAX WIDTH:	<14"
MAX DEPTH:	<18"
CONVEYOR SPEED:	MANUAL
SYSTEM VOLTS/PHASE:	480/3
MAX CURRENT LOAD:	33 AMPS
TOTAL HTR WATTS:	24,165

ITEM	FEATURE
1	ELECTRIC INFRARED HEATERS WITH ADJUSTABLE POWER AND POSITION
2	OPERATOR CONTROL PANEL
3	ADJUSTABLE END DOORS
4	BOLT ON OVERHEAD TROLLEY WITH MANUAL POSITION ROLLER PLATE
5	OVEN EXHAUST GATE, 6"
6	BOLT ON CONNECTING BRACKETS
7	BOLT ON TROLLEY SUPPORT BAR
8	BOOTH EXHAUST COLLAR, 12"
9	HIGH INTENSITY LED BOOTH LIGHT FOR HAZARDOUS LOCATION, 120V, 75W
10	CLEAR POLYCARB SPRAY BOOTH TOP
11	STORAGE CABINET
12	SIDE DOORS FOR ACCESS TO FILTERS, EXHAUST FAN, AND AIR CHAMBER
13	
14	AIR PRESSURE METER
15	BACKWARD CURVED IMPELLER WITH 2 HP INVERTER DUTY MOTOR
16	STAGE 1 FILTER, 24" POLYESTER FILTER PAD
17	STAGE 2 FILTER, 24" POLY BAG
18	STAGE 3 FILTER, 24" V-CELL BOX, MERV 16
19	.
20	.

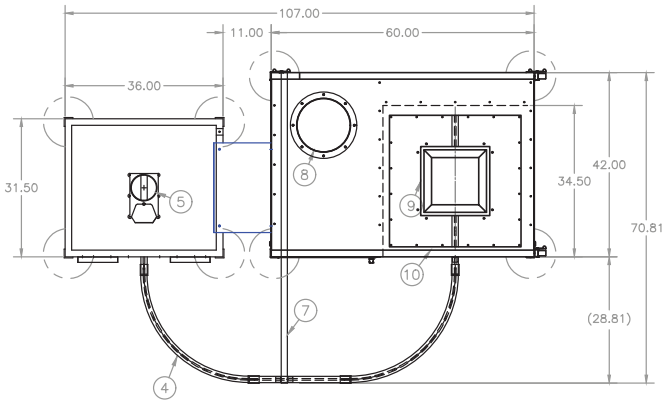

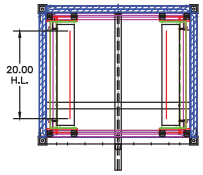

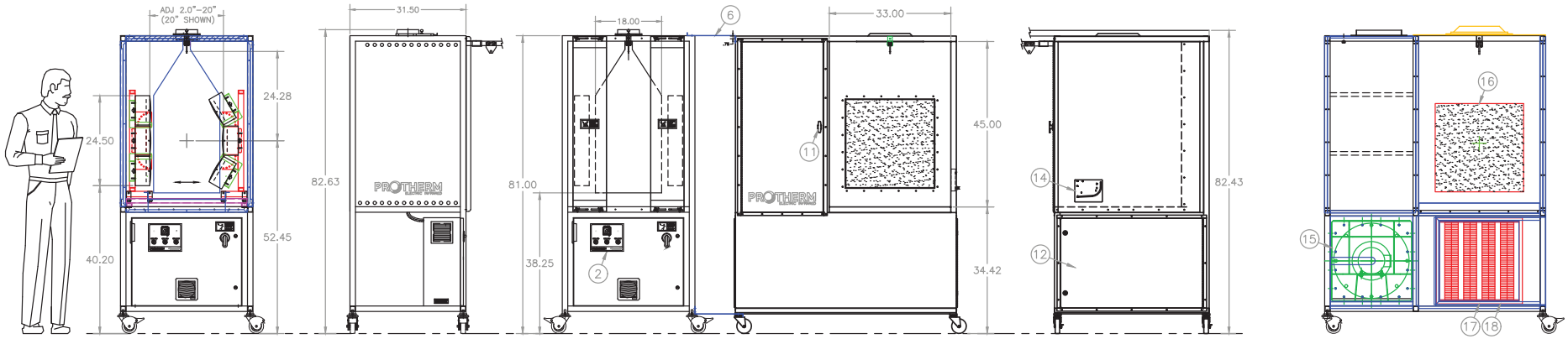

OVEN FRONT SECTIONAL VIEW | OVEN LEFT SIDE VIEW | OVEN FRONT VIEW | SPRAY BOOTH FRONT VIEW | SPRAY BOOTH RIGHT SIDE VIEW | SPRAY BOOTH SECTIONAL VIEW

.
.
.
4) TOTAL ESTIMATED WEIGHT IS 1500 LBS; OVEN IS 500LBS, SPRAY BOOTH 950 LBS, CONVEYOR 50 LBS.
3) CUSTOMER SUPPLIED FIRE SUPPRESSION IS REQUIRED BASED UPON PRODUCT AND COATING REQUIREMENTS.
2) OVEN AND SPRAY BOOTH PAINTED EIDER WHITE
1) SPRAY BOOTH DESIGNED FOR POWDER APPLICATION ONLY! LIQUID WILL REQUIRE DIFFERENT FILTERS.

NO	REVISION	BY	DATE
B	AS BUILT SHEET METAL BOOTH CONSTRUCTION OVEN AND CONVEYOR DETAILS	KDW	30SEP22
A	AS RELEASED TO BUILD	KDW	17JUN22

PROTHERM ELECTRIC INFRARED
PROTHERM LLC
801 CENTRAL AVE N
BRANDON MN 56315 USA
WWW.PRO-THERM.COM

THIS PRINT CONTAINS CONFIDENTIAL INFORMATION WHICH IS THE PROPERTY OF PROTHERM LLC. BY ACCEPTING THIS INFORMATION, THE BORROWER AGREES THAT IT WILL NOT BE USED FOR ANY PURPOSE OTHER THAN THAT FOR WHICH IT IS LOANED!

DRAWN BY	WENDT
DATE	17JUN22
SCALE	NONE
DRAWING NO.	8-22 PS
COMPANY/PART NAME	PROTHERM SALES
SHEET NO.	1 OF 1
MAT'L.	MINI MOBILE SMALL SPRAY & CURE SYSTEM
QTY	1